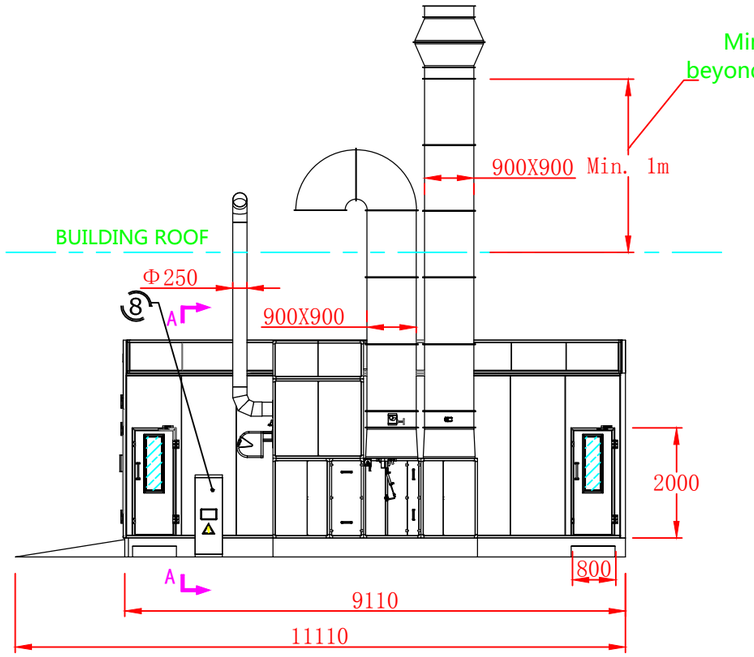

SIDE VIEW

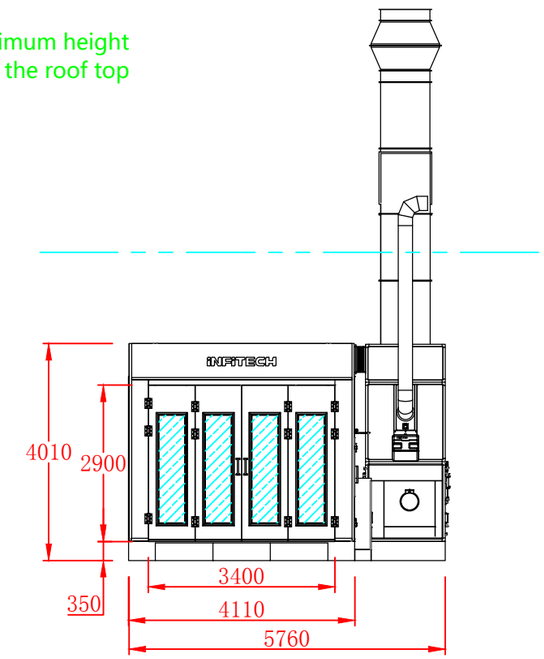

FRONTAL VIEW

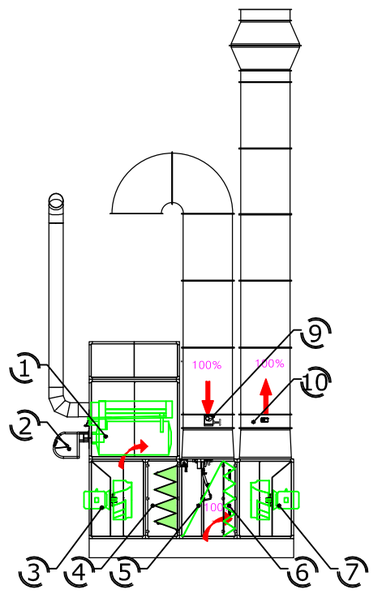

Generator system

1.315KW SUS304 HEAT EXCHANGER
2.RL-34-2 FUEL OIL BURNER
3.11KW INTAKE AIR FANS(35000m³/h , 650pa)
4.PREFILTRATION FILTER BAGS
5.CYCLE DAMPER FOR SPRAYING/OVEN PHASE
6.POSTFILTRATION FILTER
7.11KW OUTLET AIR FANS(35000m³/h , 650pa)
8.ELECTRIC POWER AND CONTROL PANEL
9.MANUALLY DAMPER
10.Electrical DAMPER

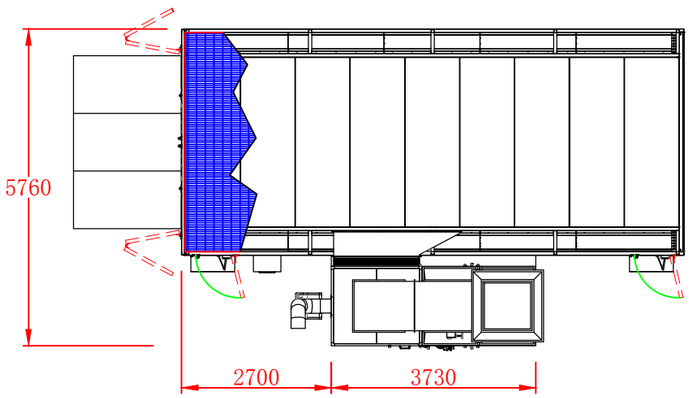

PLANT

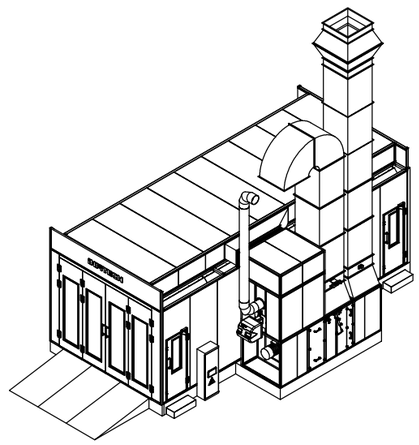

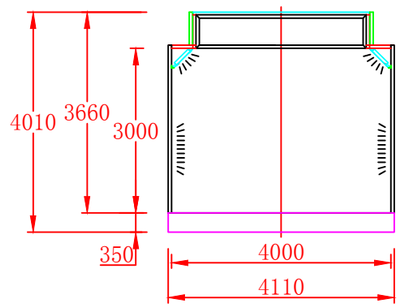

A-A VIEW

INFITECH®				Spray Booth IT-L9				Product Model	
								Part No.	
Designed		Date:		Material	Quantity	Weight	Scale	Unit	mm
Drawn		Date:			1		1:1	Recision No.	
Checked		Date:							
Approved		Date:		View		Total Page ,Page		Description	